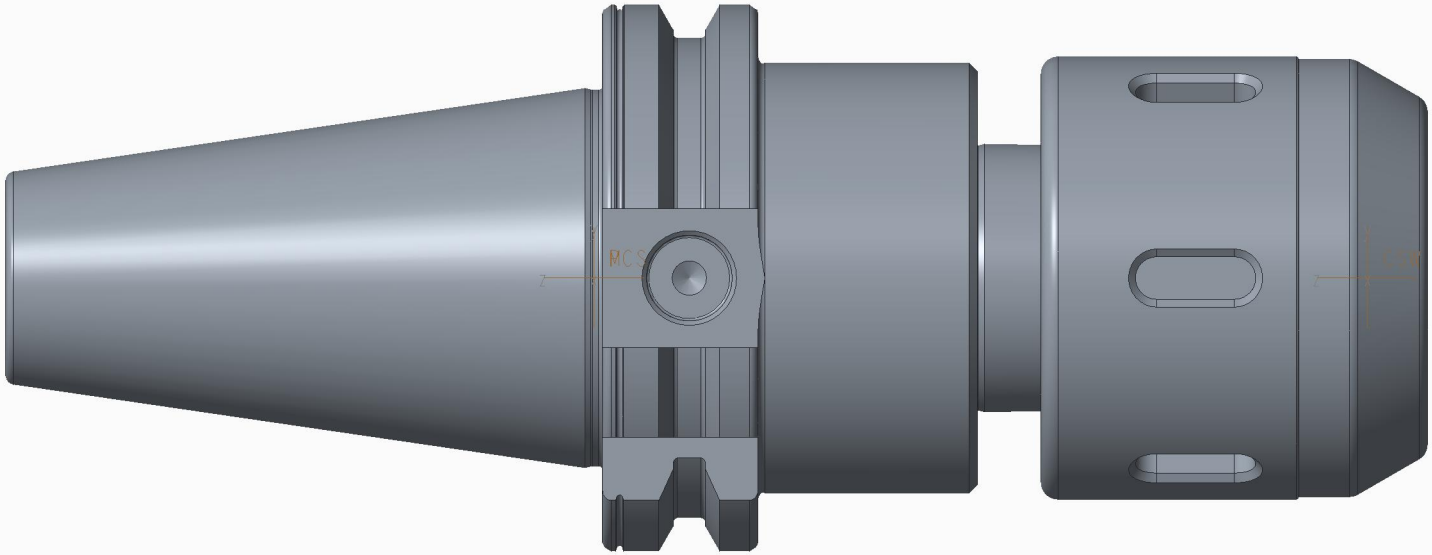
MCS
CPM