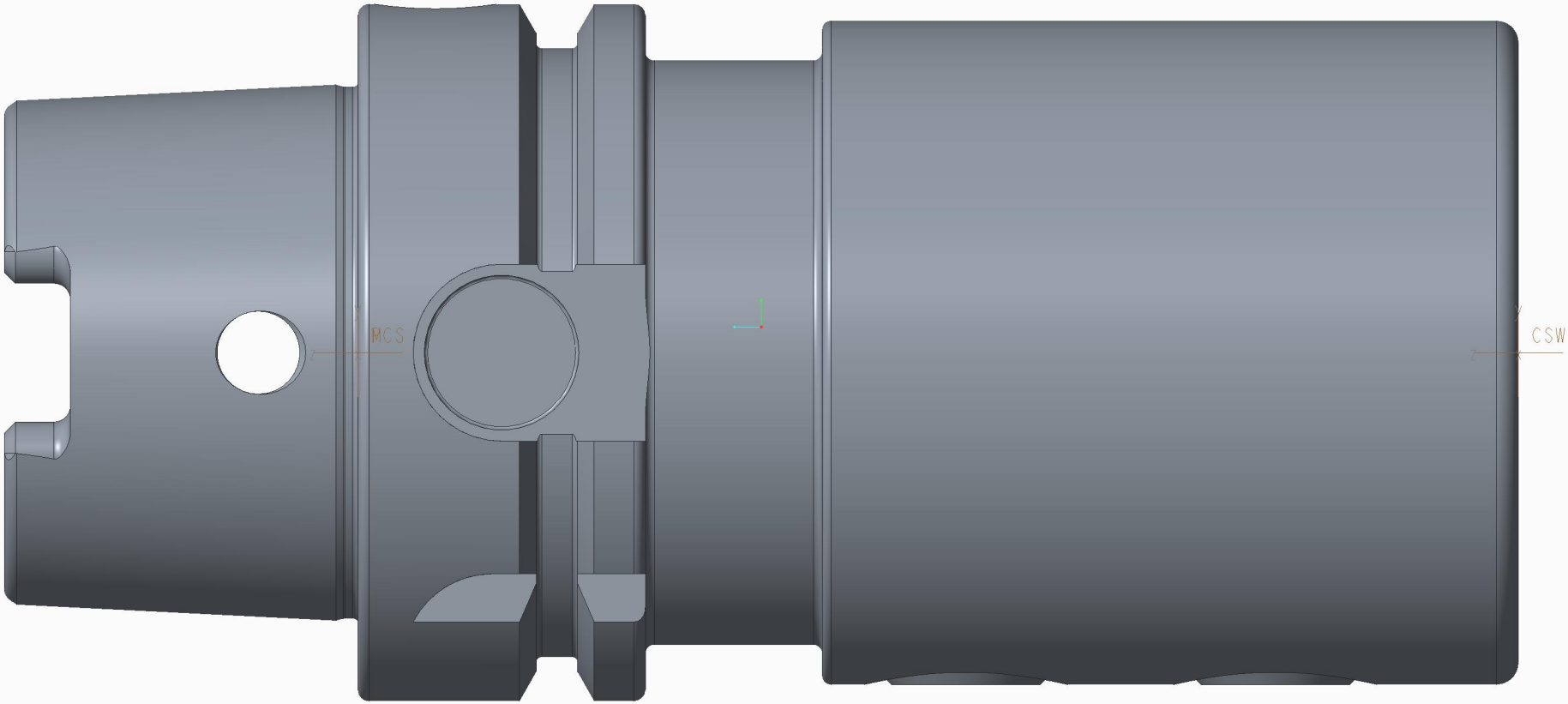
MCS
CSW